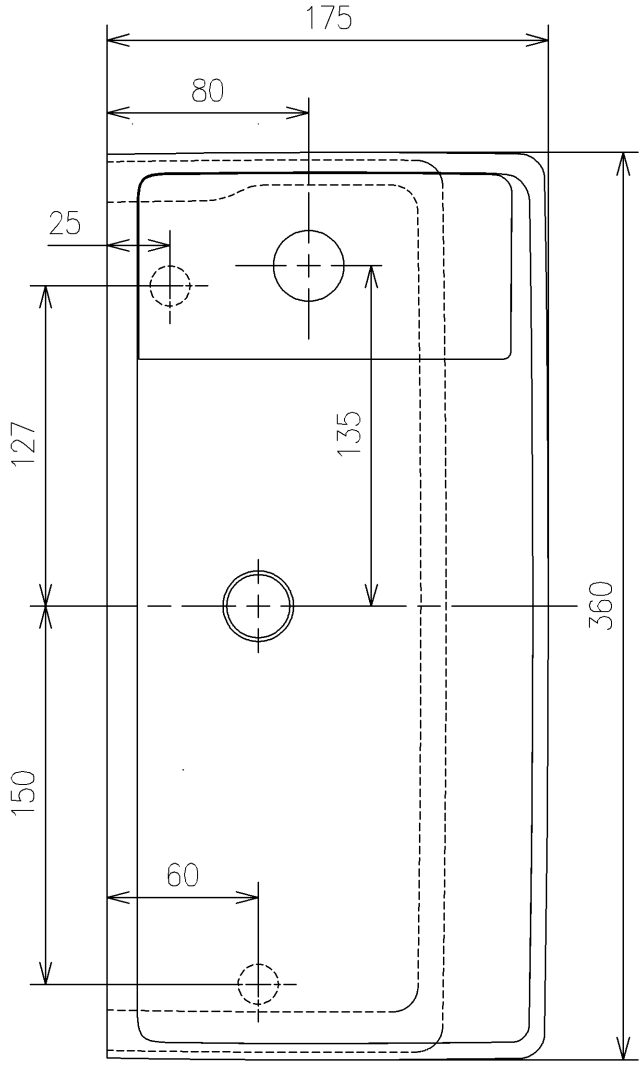

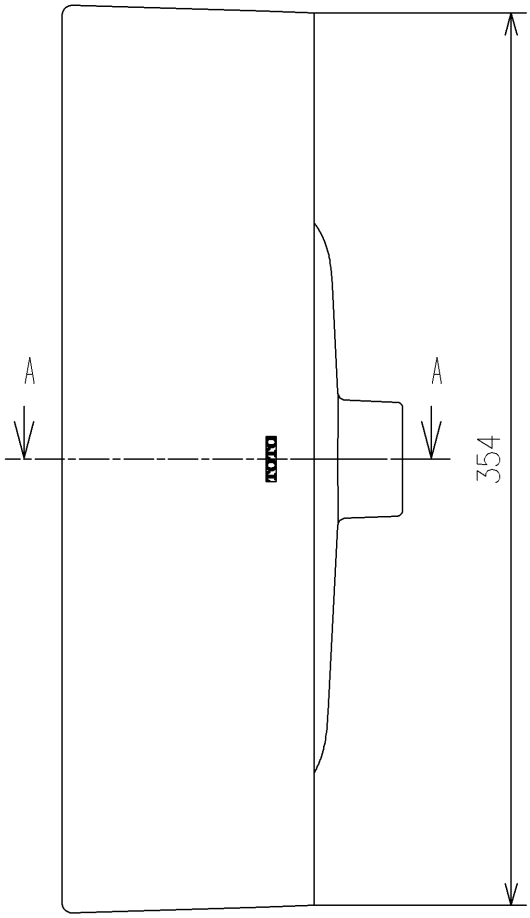

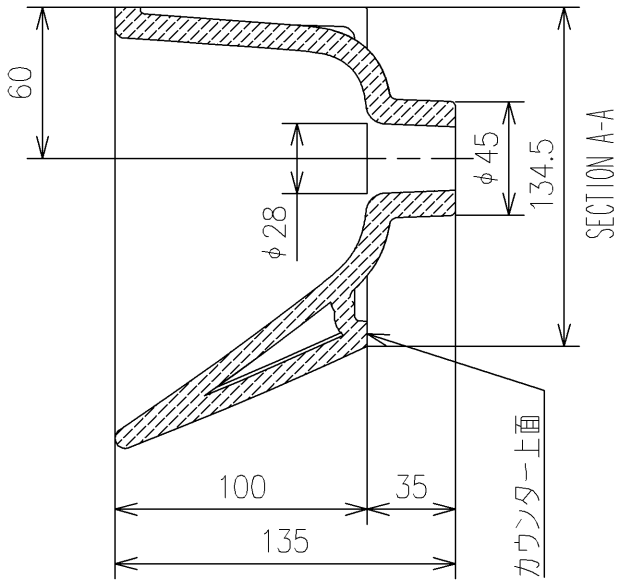

TOTO		UNIT mm	SCALE 1:3	DATE 2019-Sep-27	DRAWN Toshihiro.Satou
TITLE ベッセル式手洗器					CHECKED yoshikatsu.adachi
VESSEL HAND BASIN					APPROVED satoshi.yamakawa
REMARKS					ITEM NUMBER L50D

PAGE No. 1 / 1 A4