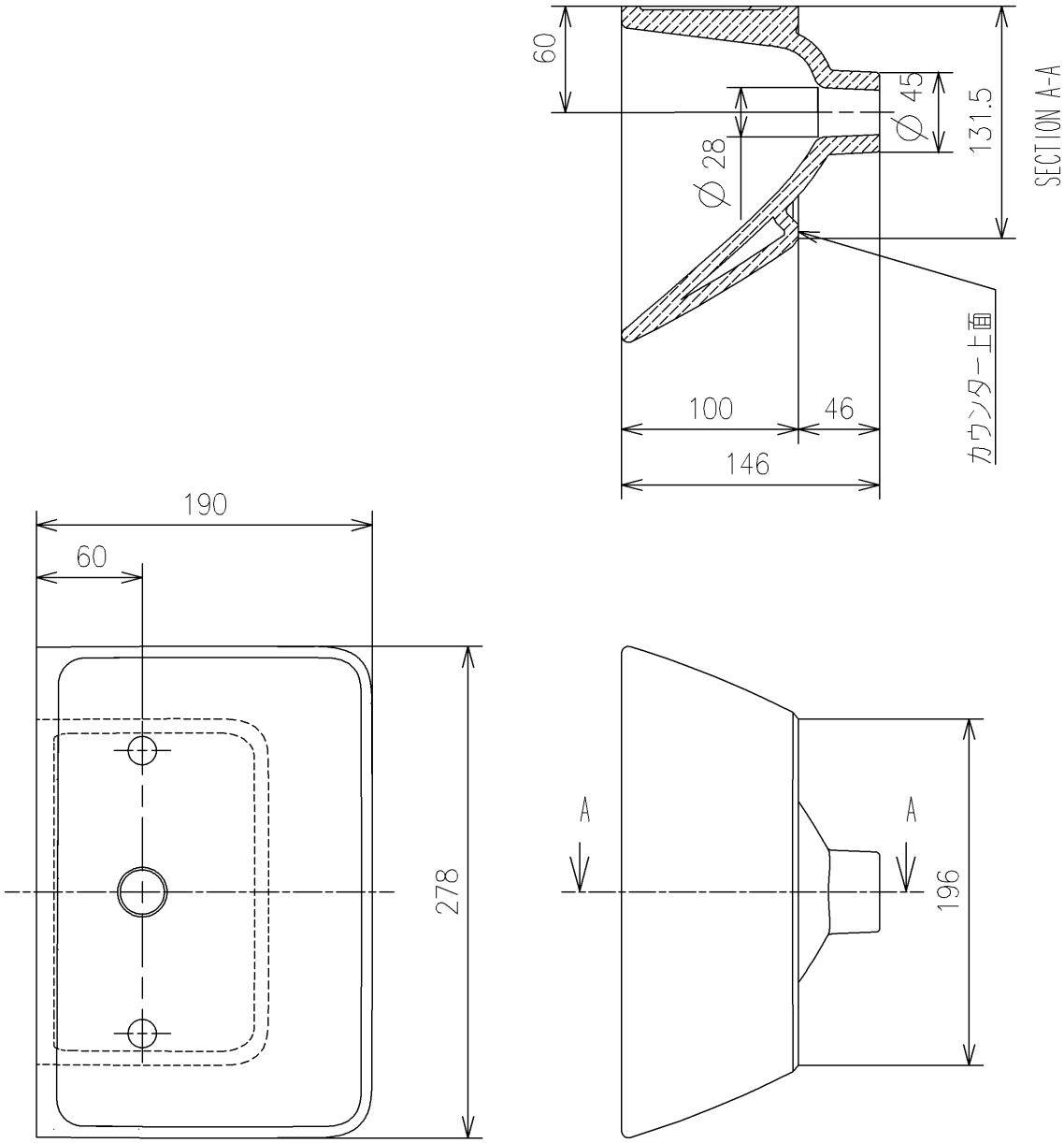


| | | | | | |
|---|---|---|---|---|---|
| TOTO | | UNIT mm | SCALE 1:4 | DATE 2019-Sep-20 | DRAWN Toshihiro.Satou |
| TITLE ベッセル式手洗器 | | | | | CHECKED yoshikatsu.adachi |
| VESSEL HAND BASIN | | | | | APPROVED satoshi.yamakawa |
| REMARKS | | | | | ITEM NUMBER L724 |